A

PBL REPORT

ON

"SMART DIGITAL CLOCK WITH TASK REMINDER"

for Partial Fulfillment
of the Requirements for the
PROJECT BASED LEARNING
of S.Y. B.TECH E&TC – 2025 Course,
An Autonomous Institute Affiliated to the Savitribai Phule Pune University, Pune.

By

Rohan Sakhare **Exam No-S240502257**
Roshni Rajput **Exam No-S240502251**
Rudraksh Samundre **Exam No-S240502228**
Satyam Sonawane **Exam No-S240502303**

GUIDE
Prof Dr. M . A. Gangarde

DEPARTMENT OF
ELECTRONICS AND TELECOMMUNICATION ENGINEERING

PUNE INSTITUTE OF COMPUTER TECHNOLOGY
PUNE – 43

ACADEMIC YEAR: 2025 - 2026

CONTENTS

	Abstract	i
	List of Figures	ii
	List of Tables	iii
	Abbreviations	iv
1	Introduction	Page No
	1.1 Back ground and Context	1
	1.2 Relevance	1
	1.3 Literature Survey	1
	1.4 Motivation	2
	1.5 Aim of the Project	2
	1.6 Scope and Objectives	3
2	Block Diagram	4
	2.1 Technical Approach	4
	2.2 Block diagram	4
	2.3 Flow chart	5
	2.4 Hardware / software resources	6
3	System Design	9
	3.1 Circuit Diagram	9
	3.2 Design Calculation	10
4	Implementation, Testing	12
	4.1 Implementation	12
	4.2 Testing and debugging	14
5	Results and conclusion	16
	5.1 Results	17
	5.2 Conclusion	18
	5.3 Future scope	18
	Bill of Material	19
	References	19
	Datasheets	

ACKNOWLEDGEMENT

We would like to express our sincere gratitude to our project guide, **Dr. M. A. Gangarde**, for his valuable guidance, continuous support, and encouragement throughout the completion of this project. His insights and suggestions were extremely helpful in successfully carrying out this work.

We also extend our thanks to all the faculty members and staff of the Electronics and Communication Engineering department for their support and assistance during the project.

We are grateful to our colleagues and friends who contributed directly or indirectly to the successful completion of this project.

Finally, we would like to acknowledge all the resources and references that helped us in gaining knowledge and completing this work effectively.

Roshni Rajput	22262
Rudraksh Samundre	22264
Rohan Sakhare	22265
Satyam Sonawane	22267

ABSTRACT

This project presents an **IoT-based Task Manager Clock** designed to reduce missed reminders by combining real-time embedded hardware with cloud task scheduling. The system uses an ESP32 controller, DS3231 RTC module for accurate timekeeping, TM1637 4-digit display for continuous clock output, and a 16x2 I2C LCD for task details. Tasks are created through a web application and stored in Firebase Realtime Database, from which the ESP32 periodically fetches updated schedules via Wi-Fi.

At scheduled times, the device compares RTC time with cloud task data and triggers alerts using a buzzer while displaying task title, description, and priority on LCD. The implementation includes reconnection logic for Wi-Fi/Firebase, duplicate-trigger prevention, handling of daily/repeating tasks, and fallback behavior that keeps local clock operation active even during network interruptions. Overall, the system provides a practical, low-cost, and always-visible reminder platform that bridges web-based task management with reliable physical notifications in real time

ABBREVATIONS

Abbreviation	Full Form
ESP32	Espressif 32-bit Microcontroller
RTC	Real-Time Clock
DS3231	Real-Time Clock IC (Maxim Integrated)
TM1637	4-Digit 7-Segment Display Driver IC
LCD	Liquid Crystal Display
I2C (I^2C)	Inter-Integrated Circuit
SDA	Serial Data Line
SCL	Serial Clock Line
CLK	Clock Pin
DIO	Data Input/Output Pin
GPIO	General Purpose Input/Output
Wi-Fi	Wireless Fidelity
SSID	Service Set Identifier
IP	Internet Protocol Address
API	Application Programming Interface
URL	Uniform Resource Locator
FB	Firebase
RTDB	Realtime Database
JSON	JavaScript Object Notation

List of Tables

Sr.no	Description
5.1 .1	Results
5.1.2	Comparison with Existing Systems:
5.3.1	BILL OF MATERIAL (BOM

List of Figures

Figure No.	Title
Fig. No. 2.2	**Block Diagram of IoT-Based Smart Task Reminder System**
Fig. No. 2.3	**Flow Chart of Smart Task Reminder System**
Fig. No. 2.4.1	**ESP32 Development Board**
Fig. No. 2.4.2	**RTC Module (DS3231)**
Fig. No. 2.4.3	**16x2 LCD Display**
Fig. No. 2.4.4	**Buzzer**
Fig. No. 3.1	**Circuit Diagram of IoT-Based Smart Task Reminder System**
Fig. No. 4.1.1	**Hardware Assembly of the System**
Fig. No. 4.1.2	**LCD Display Showing Time and Task**
Fig. No. 4.1.3	**Firebase Interface for Task Input**

Department of Electronics and Telecommunication Engineering

SCTR's Pune Institute of Computer Technology, Pune – 43

CERTIFICATE

This is to certify that the Project Based Learning Report entitled

"Smart Digital Clock With Task Reminder"

has been successfully completed by

Roshni Rajput	Exam No-S240502251
Rudraksh Samundre	Exam No-S240502228
Rohan Sakhare	Exam No-S240502257
Satyam Sonawane	Exam No-S240502303

This is a bonafide work carried out by them under the supervision of **Prof Dr. M. A. Gangarde** and it is approved for the partial fulfillment of the requirements for the Project Based Learning (PBL) of S.Y. B.TECH E&TC – 2025-26 Course, An Autonomous Institute Affiliated to the Savitribai Phule Pune University, Pune.

Dr. G. S. Mundada
HOD, E&TC Engg.

Prof. M . A. Gangarde
Dept. of E&TC

Place: Pune
Date:

Chapter I

INTRODUCTION

1.1 Background and Context

In modern society, managing daily tasks efficiently has become increasingly important due to busy lifestyles and increasing workload. Traditional reminder systems such as manual notes, alarms, and mobile applications often depend heavily on user interaction and continuous internet connectivity. These systems may fail in scenarios where users forget to check their devices or when internet connectivity is unavailable.

With the advancement of Internet of Things (IoT) technology, it has become possible to design smart systems that automate daily activities and provide real-time monitoring and alerts. Microcontrollers like ESP32, combined with cloud platforms such as Firebase, enable seamless communication between hardware and software systems. Additionally, Real-Time Clock (RTC) modules provide accurate timekeeping even in the absence of internet connectivity.

The concept of automated reminder systems has evolved from simple alarm clocks to intelligent IoT-based systems that can be controlled remotely and provide reliable alerts. This project builds upon these advancements to create a smart, connected, and efficient task reminder system.

1.2 Relevance

The proposed project is highly relevant to the field of Electronics and Communication Engineering as it integrates multiple core subjects such as Embedded Systems, Microcontrollers, Communication Systems, and IoT technologies.

The ESP32 microcontroller demonstrates concepts of embedded programming and hardware interfacing. The use of Wi-Fi connectivity highlights wireless communication principles, while Firebase represents cloud-based data communication and storage. The RTC module demonstrates time-based control systems, which are essential in real-time embedded applications.

This project also involves interfacing peripherals such as LCD displays and buzzers, which are fundamental in electronic system design. Overall, the project provides practical exposure to modern IoT system development, which is a rapidly growing field in electronics and communication engineering.

1.3 Literature Survey

Several researchers and developers have worked on smart reminder and IoT-based automation systems in recent years. IoT-based task management systems using cloud platforms have gained popularity due to their flexibility and real-time capabilities.

Firebase Realtime Database has been widely used in IoT applications for its ability to synchronize data instantly across multiple devices [1]. It allows seamless communication between web applications and embedded devices. However, such systems often depend entirely on internet connectivity.

ESP32-based IoT systems have been explored for home automation and monitoring applications due to their low cost, built-in Wi-Fi, and high processing capability [2]. These systems provide efficient data communication but may lack reliable time tracking without additional modules.

Real-Time Clock (RTC) modules such as DS3231 have been used in embedded systems for accurate timekeeping [3]. These modules maintain time even during power failure using battery backup. However, standalone RTC-based systems lack remote accessibility and user-friendly interfaces.

Previous systems combining IoT and RTC have shown improved performance in automation and scheduling tasks. However, many of these systems either rely heavily on internet connectivity or lack scalability and user interaction features.

Thus, there is a need for a system that combines real-time cloud synchronization with offline reliability and user-friendly control.

1.3 Motivation

Existing reminder systems have several limitations such as dependency on smartphones, lack of offline functionality, and limited automation. Many IoT-based systems fail when internet connectivity is lost, while traditional systems lack remote accessibility and flexibility.

There is a need for a smart system that can provide reliable task reminders even in the absence of internet connectivity. Additionally, the system should be easy to use, cost-effective, and scalable for different applications such as homes, hospitals, and industries.

This project is motivated by the need to bridge the gap between cloud-based smart systems and offline reliable systems. By integrating ESP32, Firebase, and RTC, the proposed system ensures both real-time updates and uninterrupted operation, making it more efficient and practical.

1.3 Aim of the Project

The aim of this project is to design and develop an IoT-based smart task reminder system that allows users to schedule tasks through a web dashboard and receive timely alerts using embedded hardware components.

The system aims to provide real-time synchronization using Firebase and ensure reliable operation using an RTC module, even in the absence of internet connectivity.

1.3 Scope and Objectives

The scope of this project includes the design and implementation of a smart reminder system using IoT technology, which integrates a web-based interface, cloud database, and embedded hardware.

The main objectives of the project are as follows:

- To develop a user-friendly web dashboard for task management.
- To store and synchronize task data using Firebase Realtime Database.
- To establish communication between ESP32 and cloud using Wi-Fi.
- To implement accurate time tracking using RTC module.
- To trigger alerts using buzzer and display task information on LCD.
- To ensure system reliability even in offline conditions.
- To design a scalable system that can be extended for future applications.

This project provides a foundation for developing advanced IoT-based automation systems in various domains.

Chapter II

DESCRIPTION OF PROJECT

2.1 Technical Approach

The proposed system is designed using an IoT-based approach that integrates a web interface, cloud database, and embedded hardware components. The problem of task management and timely reminders is addressed by combining real-time data synchronization with offline reliability.

Initially, a web dashboard is developed using frontend technologies to allow users to input tasks along with scheduled time. This data is then stored in Firebase Realtime Database in JSON format. Firebase is used because it provides real-time synchronization and easy integration with IoT devices.

The ESP32 microcontroller is used as the central processing unit of the system. It connects to Wi-Fi and retrieves task data from Firebase using API calls. To ensure accurate timekeeping, a Real-Time Clock (RTC) module (DS3231) is interfaced with the ESP32. The RTC provides continuous time updates even when internet connectivity is unavailable.

The ESP32 continuously compares the current time from the RTC with the scheduled task time retrieved from Firebase. When a match is detected, the system activates a buzzer to generate an alert and displays the task information on an LCD screen.

Thus, the system combines cloud-based real-time updates with hardware-based time tracking to provide a reliable and efficient reminder system.

2.2 Block diagram of IoT-Based Smart Task Reminder System

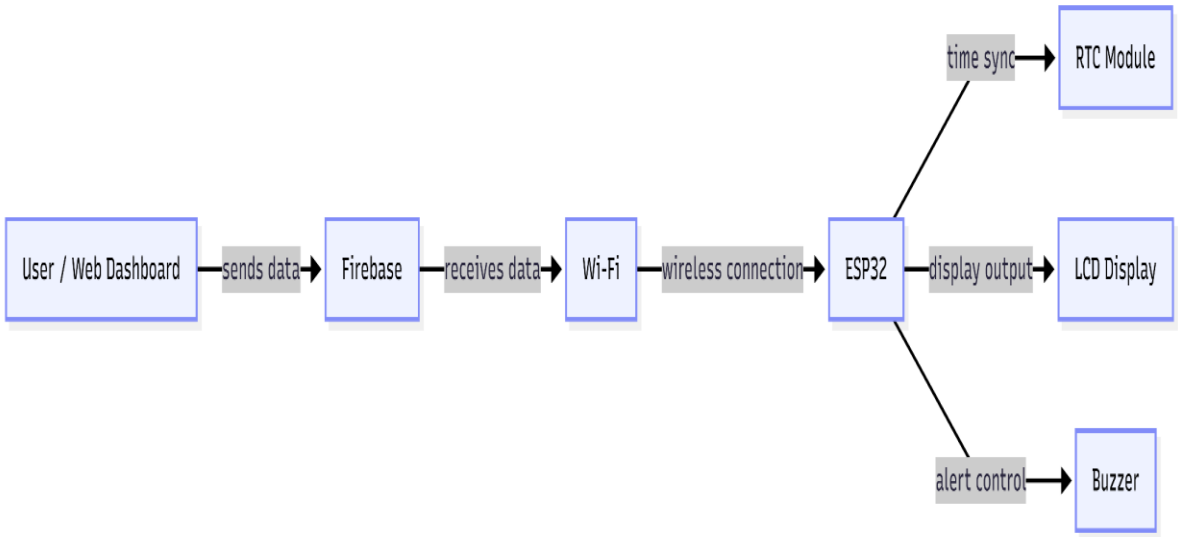

Fig. No. 2.2 Block Diagram of IoT-Based Smart Task Reminder System

The block diagram represents the overall architecture of the system.

- The Web Dashboard acts as the user interface where tasks are entered, modified, or deleted. It allows users to interact with the system remotely.

- Firebase Realtime Database serves as the cloud storage where task data is stored in JSON format. It ensures real-time synchronization between the dashboard and ESP32.
- The Wi-Fi module (inbuilt in ESP32) enables communication between the cloud and the hardware system.
- ESP32 is the main controller that processes data, fetches tasks from Firebase, and controls all connected components.
- The RTC module (DS3231) provides accurate real-time information and continues to operate even during power or internet failure.
- The LCD display is used to show current time and task details to the user.
- The buzzer acts as an alert mechanism, producing sound when the task time matches the current time.

Together, these components form a complete IoT-based reminder system.

2.3 Flow chart of IoT-Based Smart Task Reminder System

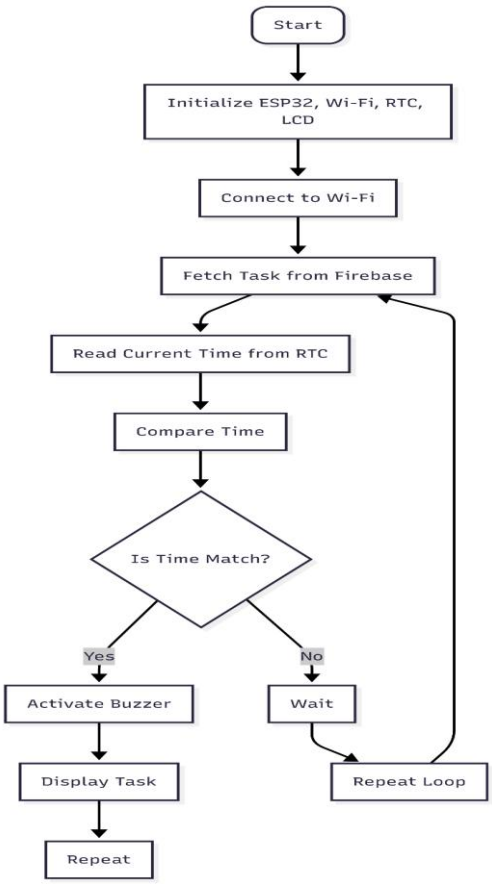

Fig. No. 2.3 Flow Chart of Smart Task Reminder System

The system starts by initializing all components including ESP32, Wi-Fi, RTC module, and LCD display. The ESP32 then connects to the Wi-Fi network to access Firebase database.

After successful connection, the ESP32 fetches task data from Firebase. Simultaneously, it reads the current time from the RTC module.

The system continuously compares the task time with the current time. If the time matches, the buzzer is activated and the task is displayed on the LCD. If the time does not match, the system continues to monitor and repeats the process.

This loop ensures continuous operation and real-time alert generation.

2.4 Hardware and Software Resources

HARDWARE COMPONENTS

1. ESP32 Microcontroller

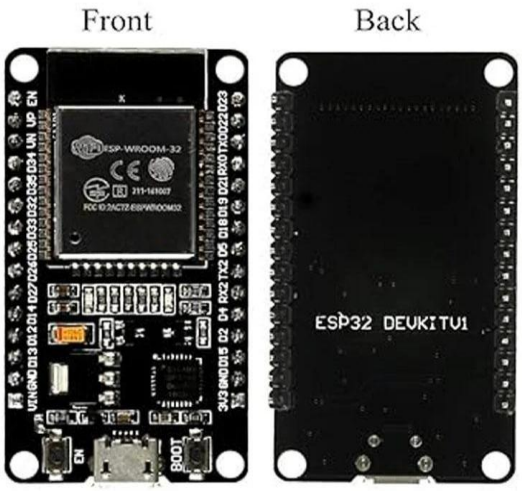

Fig. No. 2.4.1: ESP32 Development Board

ESP32 is a low-cost, low-power microcontroller with built-in Wi-Fi and Bluetooth capabilities. It acts as the main controller in the system. It processes data, connects to Firebase, and controls all peripherals. It operates at a clock speed of up to 240 MHz and supports multiple communication protocols such as I2C, SPI, and UART.

2. RTC Module (DS3231)

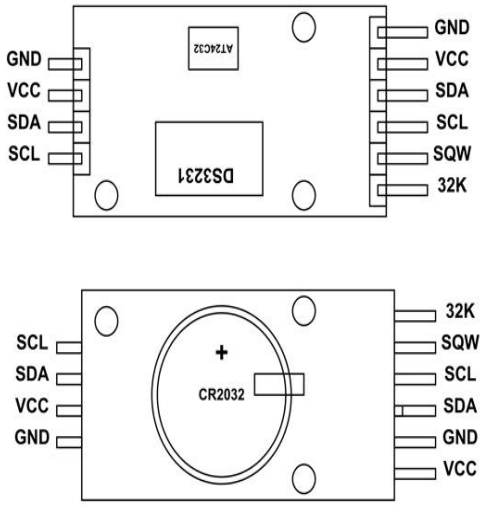

Fig. No. 2.4.2: RTC Module (DS3231)

The DS3231 RTC module is used for accurate timekeeping. It uses a crystal oscillator and maintains time even during power failure using a backup battery. It communicates with ESP32 using I2C protocol**.**

3. LCD Display (16x2)

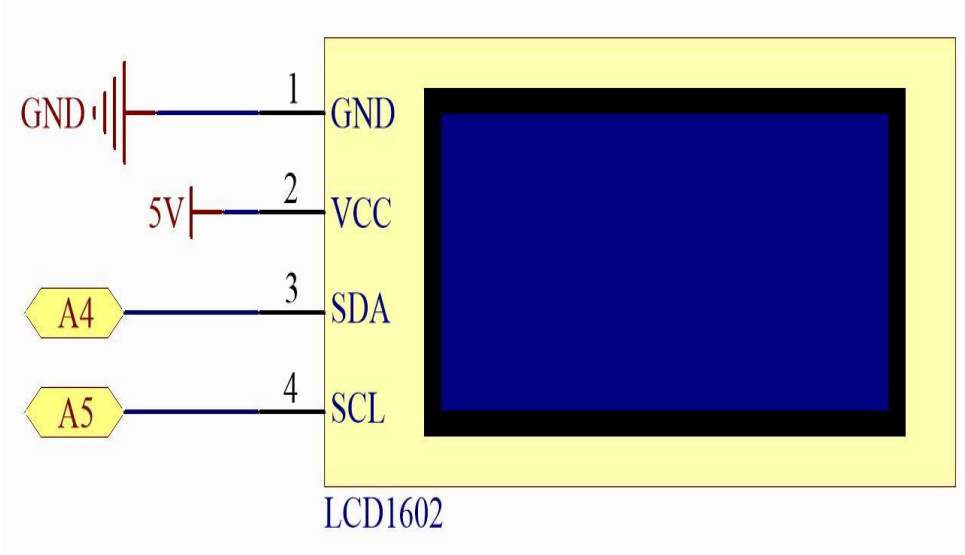

Fig. No. 2.4.3: 16x2 LCD Display

The 16x2 LCD display is used to show task information and current time. It is connected to ESP32 using I2C communication, reducing the number of required pins.

4. Buzzer

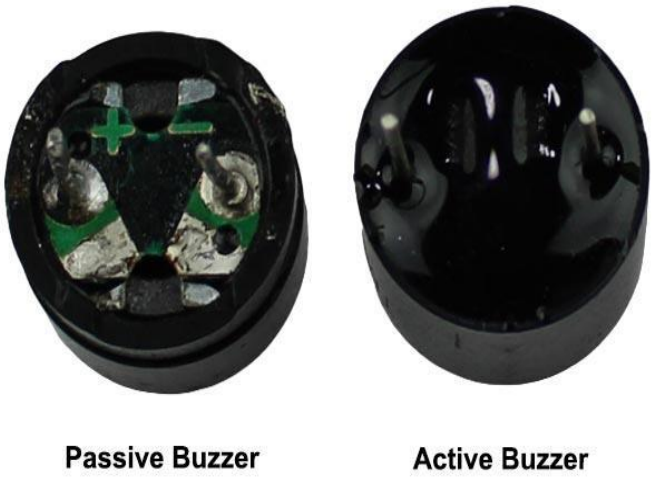

Fig. No .2.4.4: Buzzer

The buzzer is an output device used to generate sound alerts when the tas k time is reached. It is connected to a GPIO pin of the ESP32.

SOFTWARE COMPONENTS

1. Firebase Realtime Database

Firebase is a cloud-based database platform that stores data in JSON format. It provides real-time synchronization between devices and enables seamless communication between the web dashboard and ESP32.

2. Arduino IDE

Arduino IDE is used for programming the ESP32. It provides an easy-to-use interface for writing, compiling, and uploading code to the microcontroller.

3. Libraries Used

The following libraries are used in the project:

- WiFi.h → for Wi-Fi connectivity
- FirebaseESP32.h → for Firebase communication
- Wire.h → for I2C communication
- LiquidCrystal_I2C.h → for LCD control
- RTClib.h → for RTC module interfacing

Chapter III

SYSTEM DESIGN

3.1 Circuit Design

Connections:

- The circuit diagram consists of ESP32 as the central controller interfaced with RTC module, LCD display, and buzzer.
- The RTC module (DS3231) is connected to ESP32 using I2C communication. The SDA pin of RTC is connected to GPIO 21 of ESP32, and SCL pin is connected to GPIO 22. VCC and GND are connected to 3.3V and ground respectively.
- The LCD display is also connected using I2C protocol. Its SDA and SCL pins are connected to the same GPIO pins (21 and 22) of ESP32, allowing multiple devices on the same I2C bus.
- The buzzer is connected to a GPIO pin (for example GPIO 25) of ESP32, with the other terminal connected to ground. It is used to generate sound alerts.
- The ESP32 is powered using a USB power supply or 5V input. All components share a common ground to ensure proper circuit operation.

- This design uses minimal wiring due to I2C communication and ensures efficient integration of all modules.

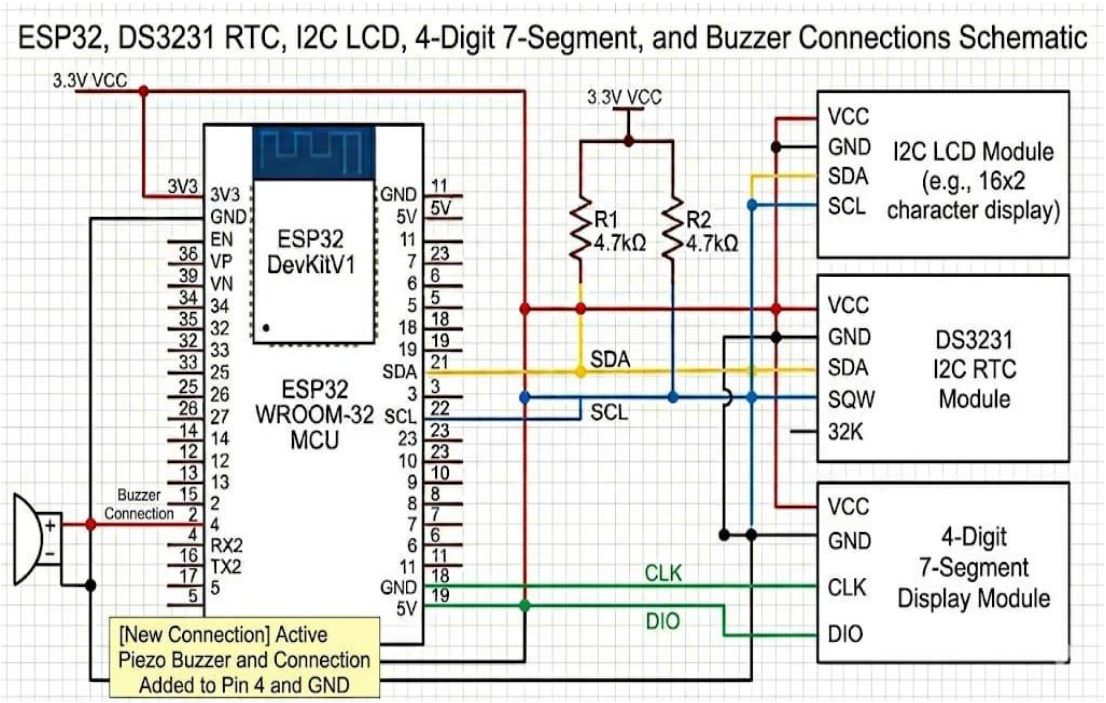

Fig 3.1 Circuit Diagram of IoT based Smart Task Reminder System

Explanation:

The system is designed in modular blocks to ensure simplicity and scalability.The ESP32 block acts as the processing unit that controls all operations. It receives data from Firebase, reads time from RTC, and controls output devices.The RTC block provides accurate real-time data to the ESP32. It ensures continuous operation even in case of power failure due to its battery backup.The LCD block displays the current time and task information to the user. It enhances user interaction with the system.The buzzer block provides an audible alert when the task time matches the current time.The communication block consists of Wi-Fi connectivity, which allows ESP32 to communicate with Firebase cloud.Each block works independently but is interconnected to form a complete system.

3.2 Design Calculation

Project is mostly **digital**, so calculations are limited

3.2.1. Time Calculation (RTC)

The RTC module uses a crystal oscillator operating at a frequency of 32,768 Hz.

Number of cycles per second:
32,768 cycles = 1 second

This frequency is chosen because it is equal to 2^15, making it easy to divide using binary counters.

Thus, time is calculated based on counting oscillator pulses.

3.2.2. Power Consumption (Basic)

The ESP32 operates at 3.3V with an average current consumption of approximately 80 mA during Wi-Fi operation.

Power consumption is calculated as:

Power (P) = Voltage (V) × Current (I)

$P = 3.3 \times 0.08$
$P = 0.264$ W

Thus, the system consumes approximately 0.264 Watts of power during operation.

3.2.3 Buzzer Operation

The buzzer operates using a digital HIGH signal from ESP32. When the GPIO pin outputs HIGH (3.3V), current flows through the buzzer, producing sound.

No complex calculation is required as it is a digital ON/OFF device.

3.2.4 I2C Communication Concept

In I2C communication, data is transmitted in bits synchronized with clock pulses.

Each clock pulse (SCL) transfers one bit of data via SDA line.

Thus, communication speed depends on clock frequency and number of bits transmitted.

Chapter IV

IMPLEMENTATION AND TESTING

4.1 Implementation

4.1.1 HARDWARE ASSEMBLY :

1.The hardware implementation of the project consists of ESP32, RTC module (DS3231), LCD display, and buzzer connected as per the circuit design.
2.All components were assembled on a breadboard using jumper wires. The ESP32 acts as the main controller and is powered using a USB cable. The RTC module is connected via I2C communication to provide accurate time. The LCD display is also interfaced using I2C protocol to minimize wiring complexity.
3.The buzzer is connected to a GPIO pin of ESP32 to provide alert notifications when the scheduled task time is reached.
4.The complete setup is compact, power-efficient, and easy to assemble, making it suitable for real-time applications.

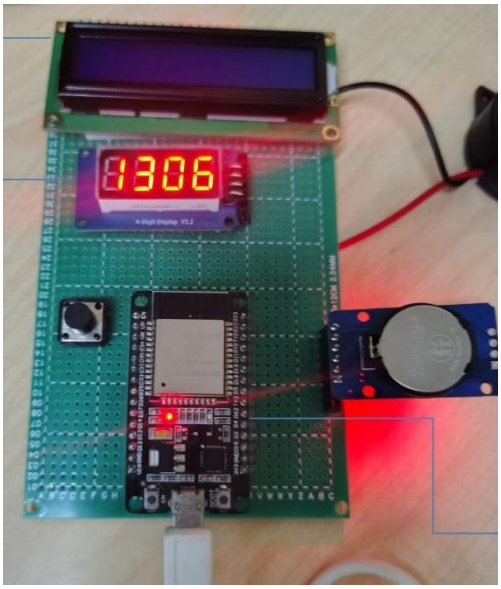

Fig 4.1.1 Hardware Assembly of Smart Task Reminder System

4.1.2 LCD Output Display

The LCD display is used to show the current time and task reminders. It continuously updates the real-time clock data received from the RTC module.

When a task is scheduled, the LCD displays the task message along with the time. This provides a clear and user-friendly interface for monitoring reminders.

The display ensures that users can easily read and understand the system output without requiring additional devices.

Fig. No. 4.1.2 LCD Display Showing Time and Task of Smart Task Reminder System

4.1.3 IoT / Firebase Interface

The system uses Firebase as a cloud database to store and retrieve task information. The ESP32 connects to Wi-Fi and communicates with Firebase to fetch scheduled tasks.

Users can input tasks and timing through a web or mobile interface, which is then updated in the Firebase database. The ESP32 continuously checks for updates and triggers alerts accordingly

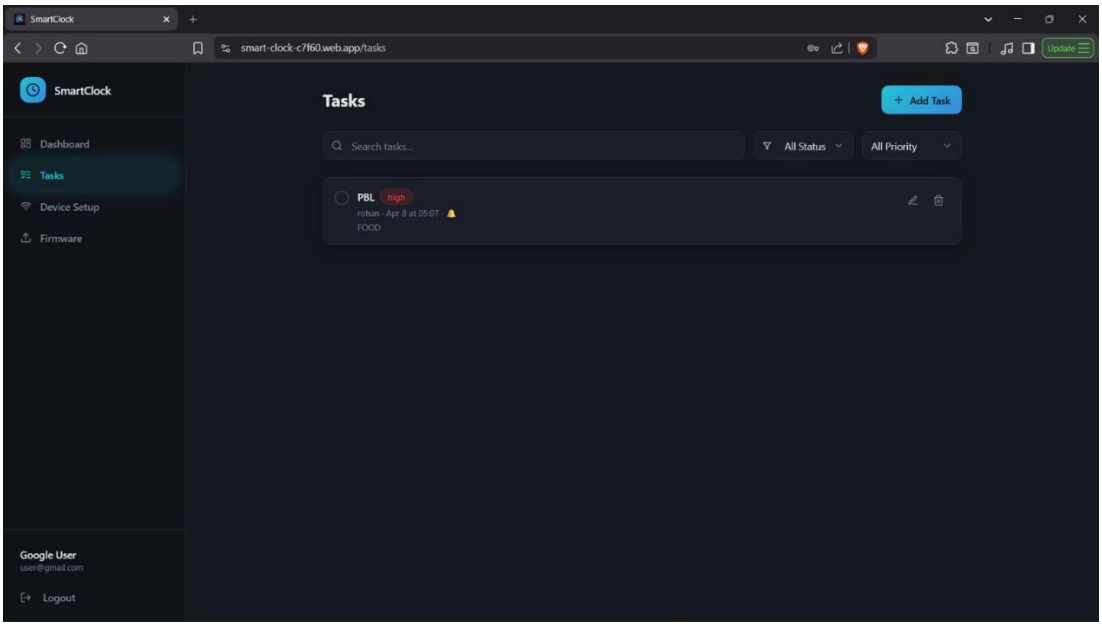

Fig 4.1.3 Web app Interface for Task Input

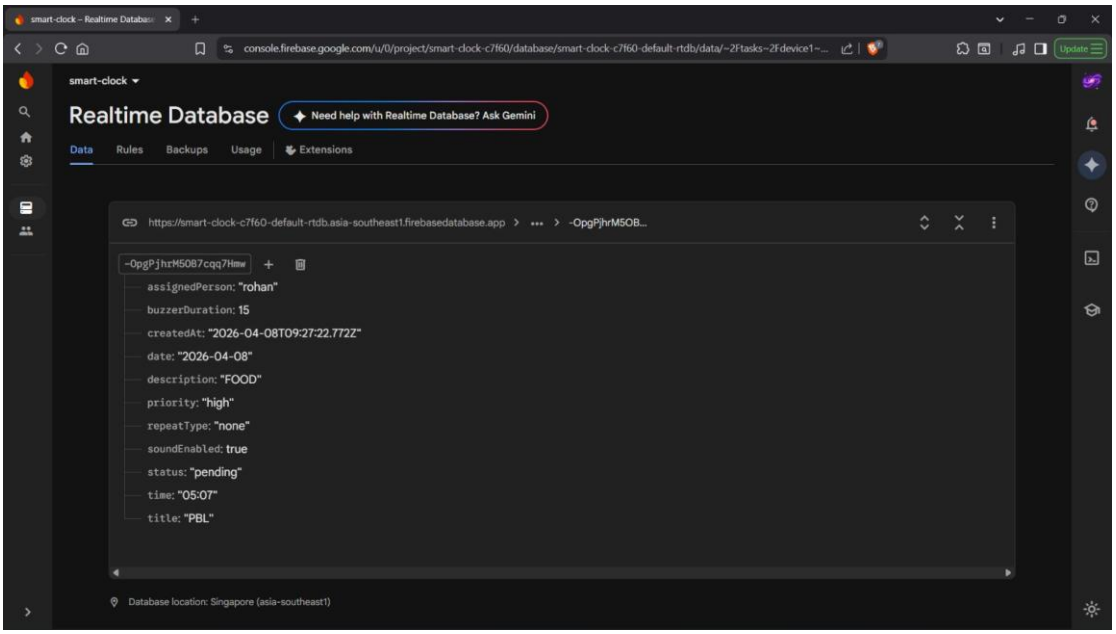

Fig 4.1.4 Firebase Interface for Task Input

This IoT integration enables remote access and control of the system, making it more flexible and scalable.

4.2 Testing and Debugging

Testing of System

The system was tested in multiple stages to ensure proper functionality.

Initially, individual components such as RTC, LCD, and buzzer were tested separately to verify their working. The RTC module was checked for accurate timekeeping, and the LCD display was tested for proper output.

After individual testing, all components were integrated with ESP32. The Wi-Fi connectivity was tested to ensure proper communication with Firebase.

Finally, the complete system was tested by setting different task timings and verifying whether the buzzer alert and LCD display were triggered correctly at the scheduled time.

Problems Faced & Debugging

Several issues were encountered during the implementation phase.

One major issue was Wi-Fi connectivity failure when using a 5 GHz network. This problem was resolved by switching to a 2.4 GHz Wi-Fi band, which is supported by ESP32.

Another issue was incorrect time display due to improper RTC initialization. This was fixed by setting the correct time using code during the initial setup.

LCD display errors such as blank screen or incorrect characters were observed due to wrong I2C address. The issue was resolved by scanning and identifying the correct I2C address.

Buzzer malfunction occurred due to incorrect GPIO pin configuration, which was corrected in the program.

Loose connections in the breadboard also caused intermittent failures, which were resolved by securing proper connections.

Through systematic debugging and testing, all issues were identified and resolved successfully.

Chapter V

RESULTS AND CONCLUSION

5.1.1 Results:

Sr. No.	Parameter Tested	Expected Result	Obtained Result	Status
1	RTC Time Accuracy	Correct real-time tracking	Accurate time displayed	Pass
2	LCD Display Output	Clear display of time & task	Proper display achieved	Pass
3	Wi-Fi Connectivity	Successful connection to network	Connected on 2.4 GHz band	Pass
4	Firebase Communicatio n	Task data fetched successfully	Real-time data received	Pass
5	Buzzer Alert	Alert at scheduled time	Alert triggered correctly	Pass
6	System Integration	All modules work together	Smooth integration achieved	Pass

5.1.2 Comparison with Existing Systems:

Feature	Traditional Digital Clock	Alarm Clock	Proposed IoT System
Time Display	Yes	Yes	Yes
Task Reminder	No	Limited	Yes
Remote Access	No	No	Yes (via Firebase)
Internet Connectivity	No	No	Yes
Real-Time Update	No	No	Yes
Smart Alerts	No	Basic	Advanced

OUTPUT:

The output of the system was observed on the LCD display, showing real-time clock data along with scheduled tasks. The buzzer alert was successfully triggered at the correct time.

The Firebase interface also displayed updated task data in real-time, confirming proper IoT functionality.

RESULTS:

The system performed as expected in all test conditions. The RTC module ensured accurate timekeeping, while the ESP32 successfully handled communication with Firebase.

The LCD provided clear visual output, and the buzzer generated alerts precisely at the scheduled time. The use of IoT technology enabled remote task scheduling, which is not possible in traditional systems.

Overall, the results demonstrate that the system is reliable, efficient, and suitable for real-time applications.

5.2 CONCLUSION

The objective of the project was to design and implement an IoT-based smart task reminder system using ESP32, RTC module, LCD, and buzzer.

The system was successfully developed and tested. It was able to display real-time data, fetch tasks from the cloud, and provide alerts at the correct time. The integration of IoT technology enhanced the functionality by enabling remote access and control.

Thus, the project achieved all its intended objectives and proved to be an effective and practical solution for smart task management.

5.3 Future Scope

The project can be further improved in the following ways:

• Integration with mobile application for better user interface
• Voice assistant support (Google Assistant / Alexa)
• Addition of multiple reminders with priority levels
• Use of battery backup system for uninterrupted operation
• Integration with wearable devices (smartwatch notifications)
• Use of AI for smart scheduling and prediction
• Expansion to home automation systems
• Addition of touch screen display for better interaction

5.3.1 BILL OF MATERIAL (BOM)

Sr. No.	Component Name	Quantity	Rate (₹)	Amount (₹)
1	ESP32 Development Board	1	325	325
2	RTC Module (DS3231)	1	150	150
3	LCD Display (16x2 I2C)	2	180	360
4	Buzzer	1	10	10
5	Breadboard	1	70	70
6	Jumper Wires	3 set	20	80
7	USB Cable / Power Supply	1	100	100
TOTAL				₹1095 /-

REFERENCES

[1] Simon Monk, Programming ESP32: Getting Started with Microcontrollers, McGraw-Hill Education, 2018.

[2] Espressif Systems, "ESP32 Technical Reference Manual," 2020.

[3] Maxim Integrated, "DS3231 Extremely Accurate I2C-Integrated RTC Datasheet," 2015.

[4] Arduino Official Documentation, "Wire Library (I2C Communication)," Available: https://www.arduino.cc

[5] Firebase Documentation, "Firebase Realtime Database Guide," Available: https://firebase.google.com

[6] Random Nerd Tutorials, "ESP32 with LCD and I2C Communication," Available: https://randomnerdtutorials.com

[7] Electronics Hub, "Interfacing DS3231 RTC with ESP32," Available: https://www.electronicshub.org